A11 611 104 01 | 4

BS 8888

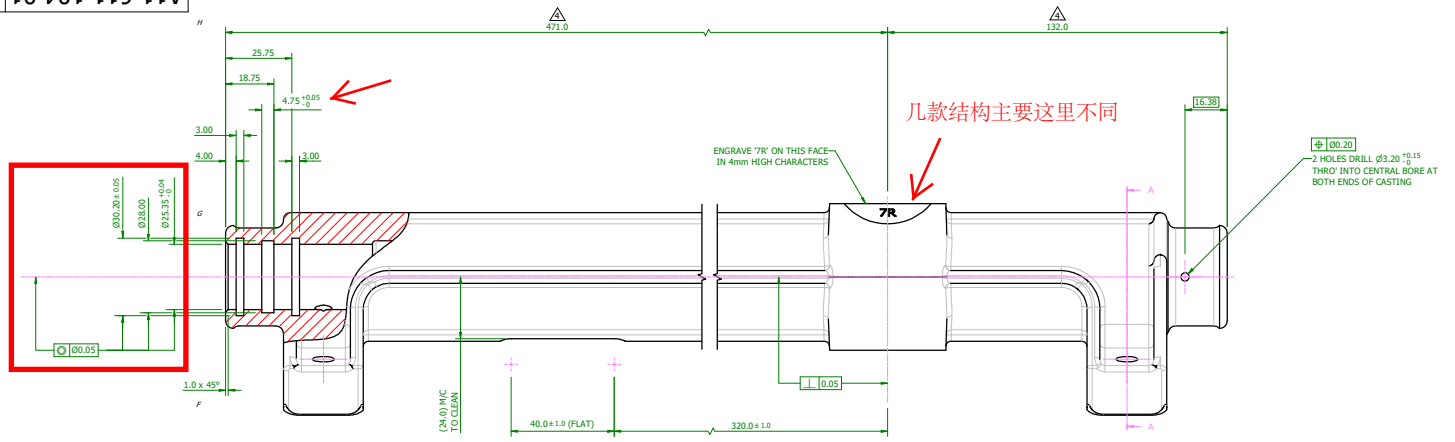


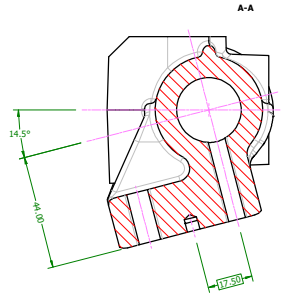


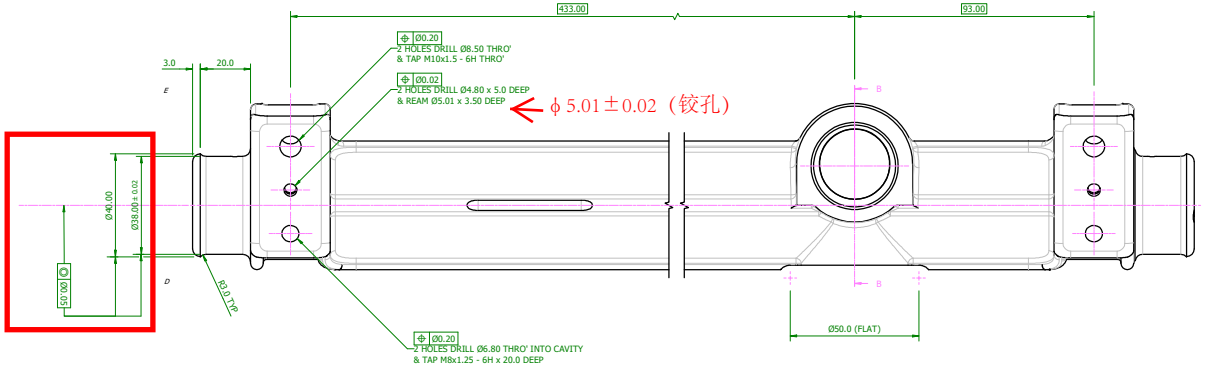


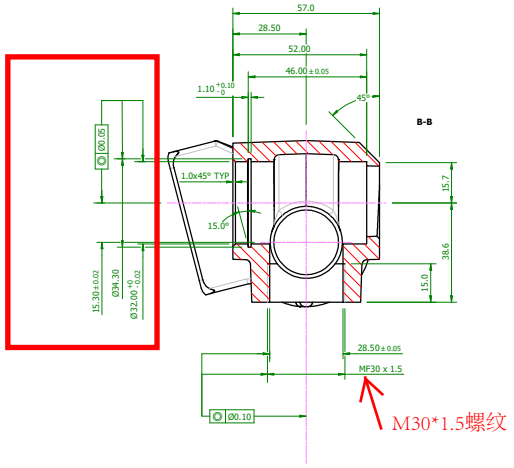


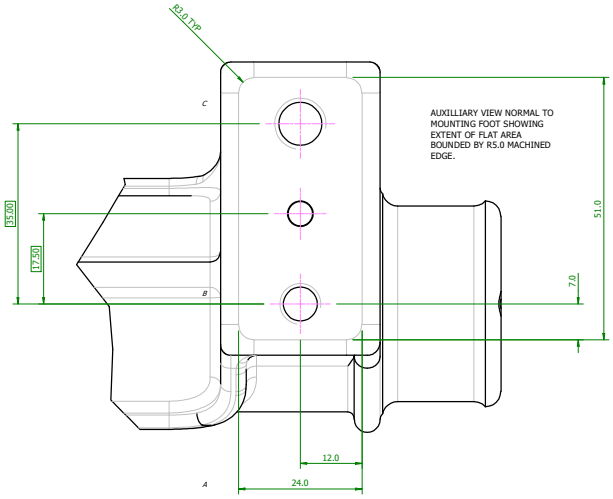


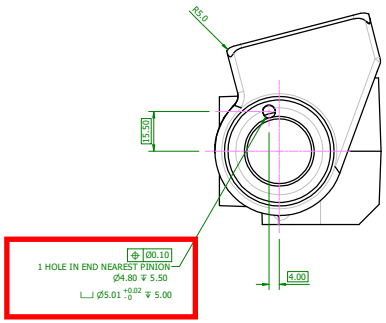


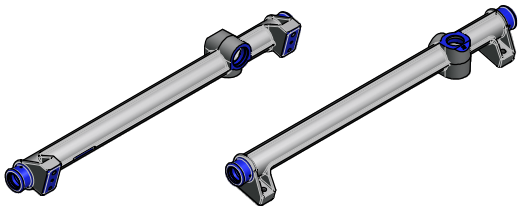

AUXILLIARY ISOMETRIC VIEW

NOTES:-

USE 0.40 TOOLING RADII IN ALL SHARP CORNERS.
BREAK ALL SHARP EDGES REMOVE ALL BURRS

UNLESS OTHER STATED MACHINE N6 ALL OVER.

CNC加工位置所有粗糙度按Ra1.6

BORE & OUTSIDE MACHINING DETAIL SHOWN AT LEFT
HAND END OF MAIN VIEWS IS TYPICAL FOR BOTH ENDS.

| ISSUE | REVISION | SIGNED | ECN | DATE |
|---|---|---|---|---|
| 4 | 471.0 and 132.0 tolerances relaxed | ZJM | 17-015 | 09/06/17 |
| 3 | Bush machining changed and end holes removed | PSWH | 10-040 | 23/04/10 |
| 2 | Redrawn in inventor, extra detail added to the end | PSWH | " | 16/11/09 |
| 1 | Ø28.00 was Ø27.50 +/-0.05 was +/-0.02, 471 was 472 | REY | 06-055 | 01/08/06 |
| A | Released for prototype manufacture, Drg No was A1161110301A1 | REY | | 01/09/04 |

| Design: | Drawn: | Approved: |
|---|---|---|
| PSWH 16/11/2009 | PSWH 16/11/2009 | DJD 24/09/2008 |

| Project: | Mass: | Format: | Scale: | Sheet: |
|---|---|---|---|---|
| - | 1.635 kg | A1 | 1 : 1 | 1 of 1 |

Material: ALUMINIUM CASTING A11 611 101 01
Treatment:
Finish:

ALL DIMENSIONS IN MILLIMETERS UNLESS OTHERWISE STATED
GENERAL TOLERANCES
0 DEC PL ± 0.50mm ; 1 DEC PL ± 0.20mm
2 DEC PL ± 0.10mm ; ANGULAR ± 0.25°
BREAK ALL SHARP EDGES AND REMOVE ALL BURRS

Title: HOUSING - RACK - RHD - (7T)

NOTICE: This drawing is the property of Titan Motorsport Ltd it must not be reproduced or copied and must be returned at any time upon demand. This drawing is also confidential and must be disclosed to no one other than an employee requiring it for the job. It is a condition under which this job is placed that no goods will be made modified or repaired from this drawing except in accordance with an official order from Titan Motorsport Ltd.

Part No. A11 611 104 01 | Issue: 4

IF IN DOUBT ASK